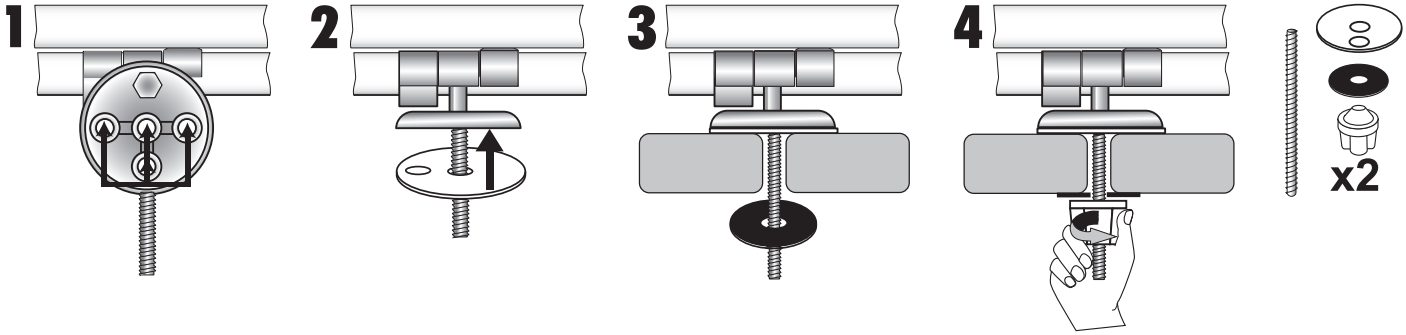
1
2
3
4
x2