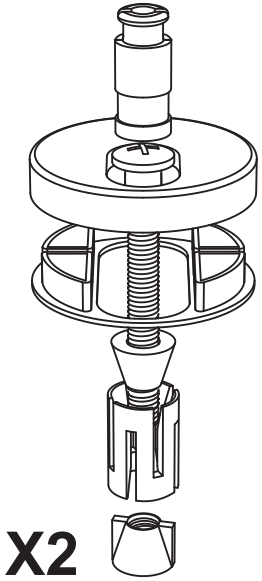

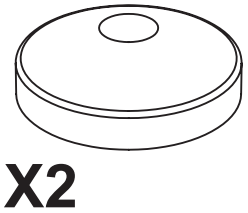

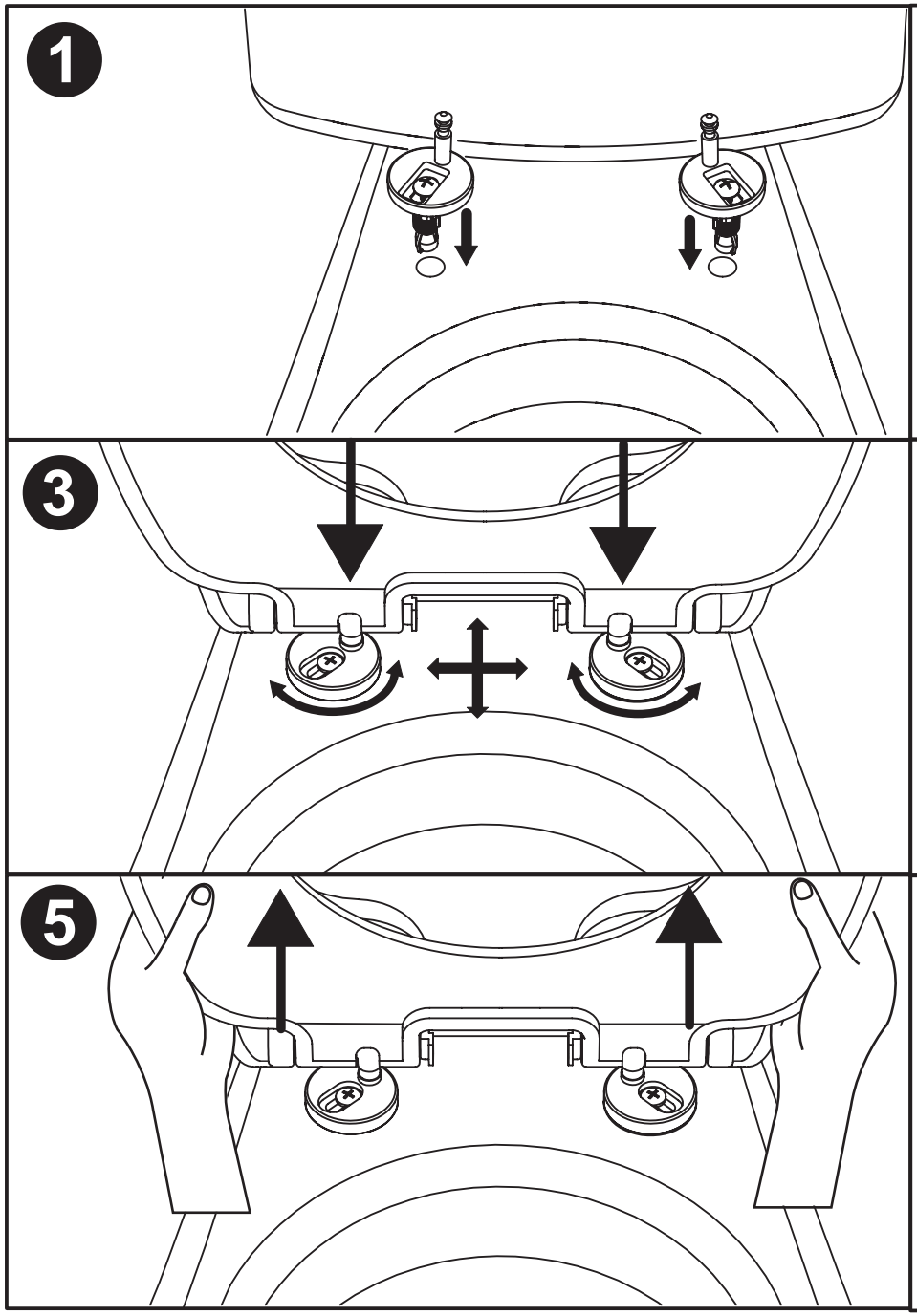

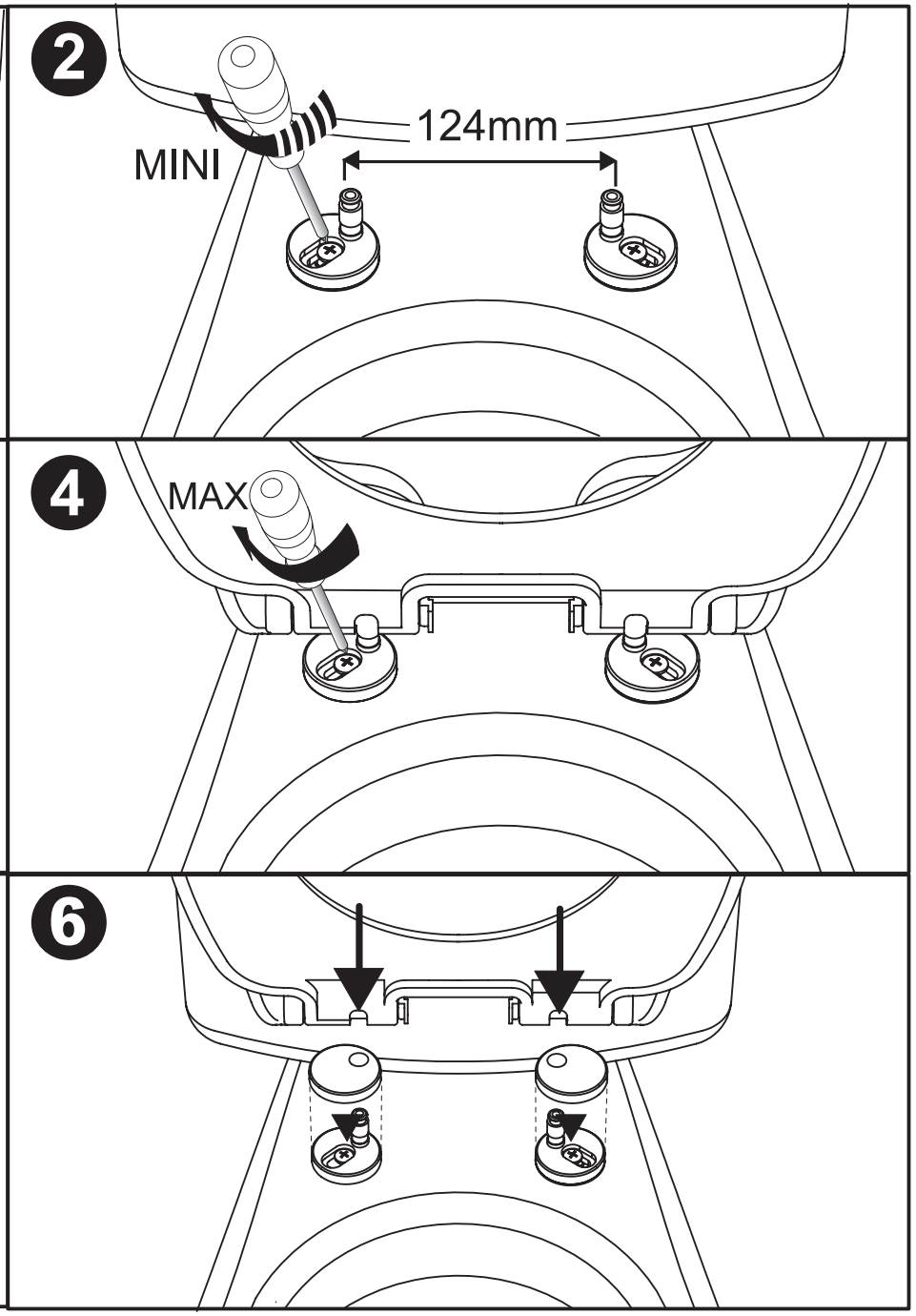

Life Style ALLiBERT

818862NT
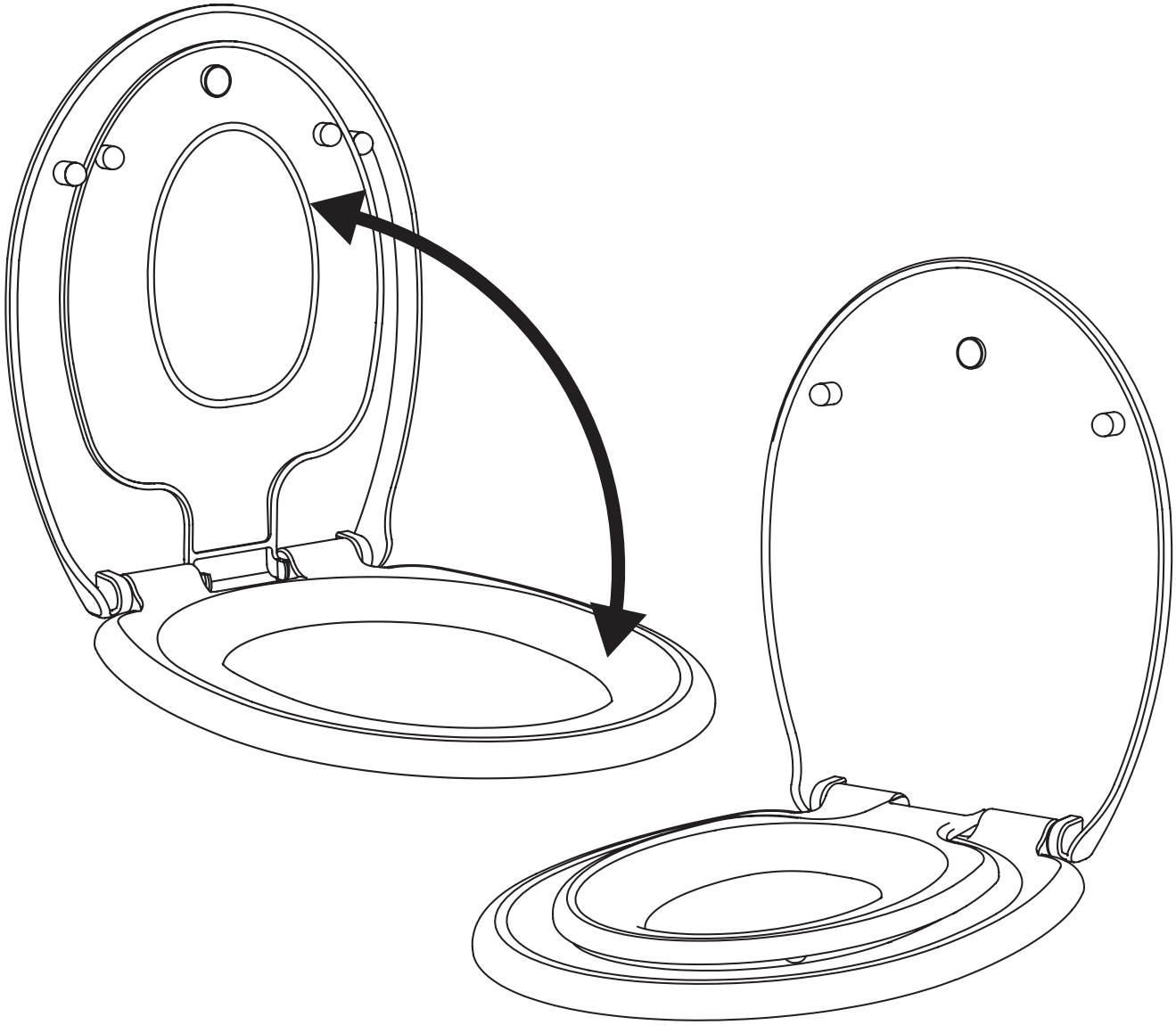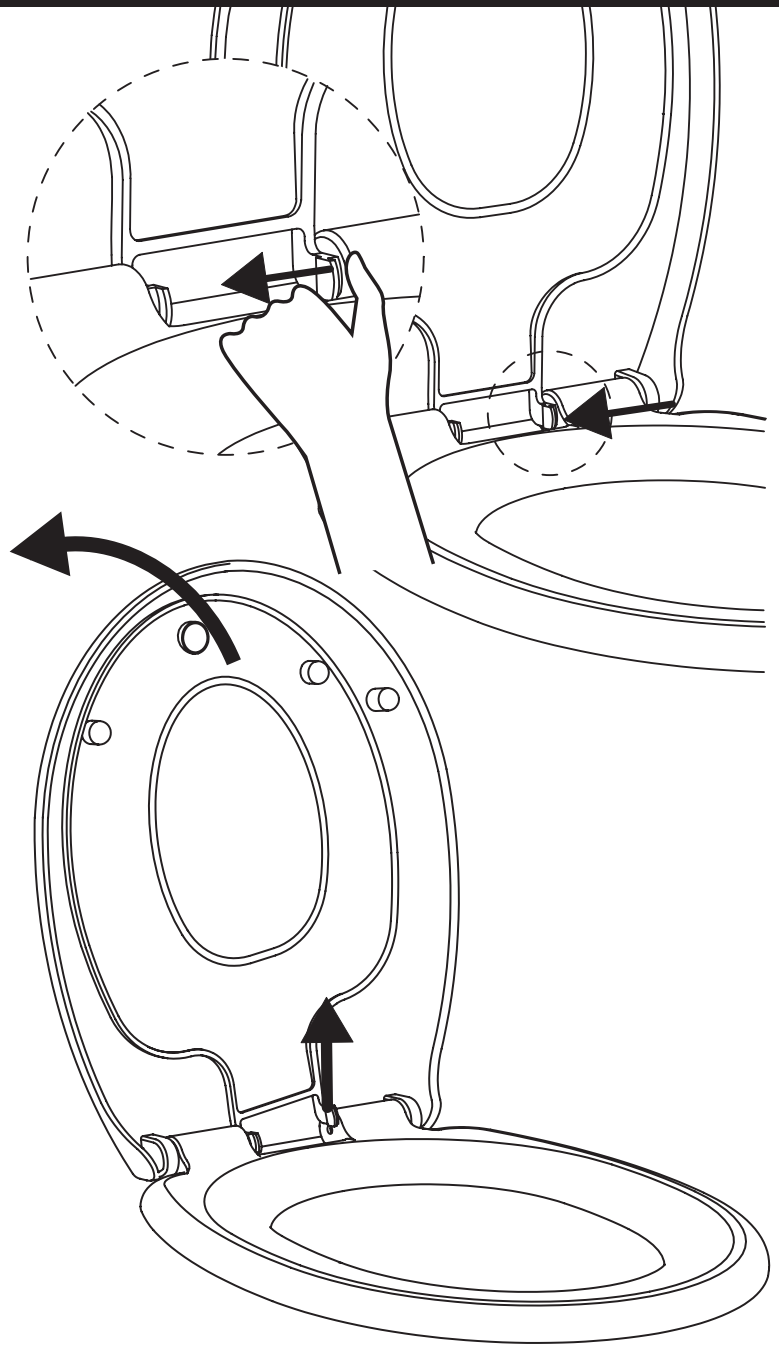
KIDS