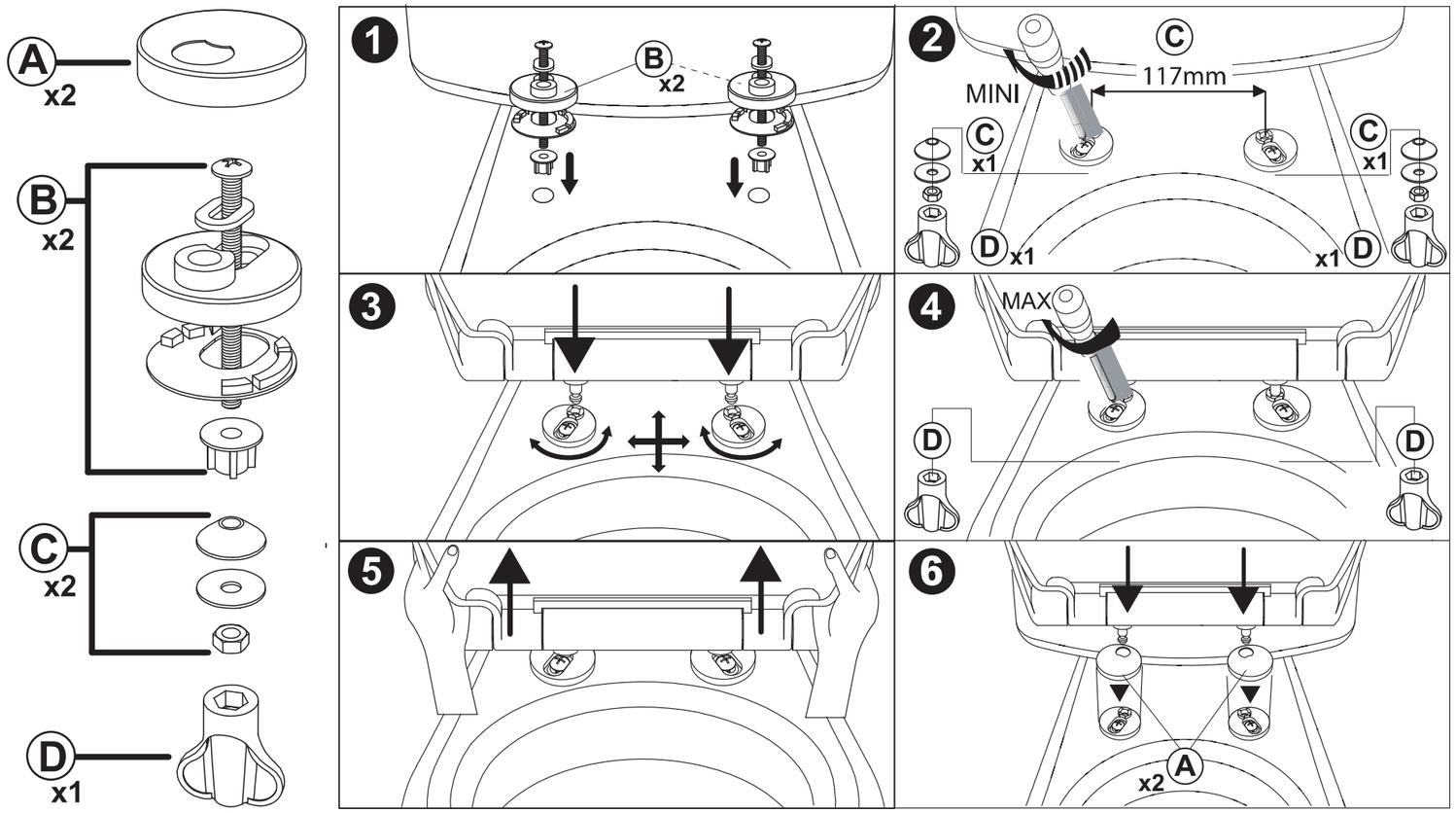
A
x2
B
x2
C
x2
D
x1
1
B
x2
2
C
117mm
MINI
C
x1
C
x1
D
x1
x1
D
3
4
MAX
D
D
5
6
x2
A

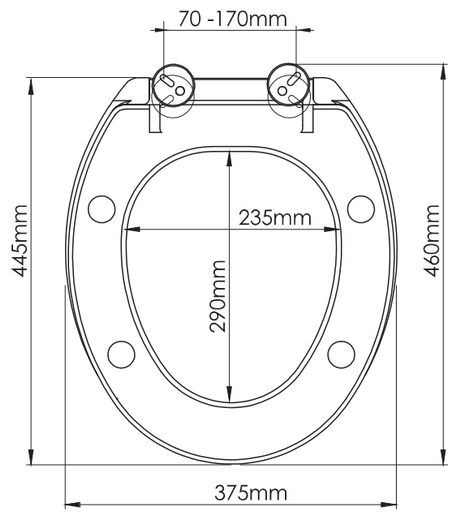
70 -170mm
235mm
290mm
445mm
460mm
375mm